Do I need Building Regulation consent for replacing windows?

All owners / builders replacing windows must make a Building Regulation application, unless windows are to be replaced by Government approved 'Competent Person's' scheme registered installer.

The new windows will have to fully meet the requirements of the Building Regulations, so even if you are replacing only one window you still need to follow the guidance below.

It is important that you obtain the necessary consent, as solicitors now specifically check this when you sell your property. If you cannot produce the appropriate documents it may cause problems with the house sale.

What do I have to do?

You have a choice, you can either –

Use an installer registered under the FENSA, CERTASS Limited or the British Standards Institution schemes, in which case you do not need to make a Building Regulations application – **unless** there are associated structural alterations to accommodate the windows i.e. where the existing opening is to be made wider requiring the installation of a new support lintel. Your installer should then ensure your windows comply fully with the Regulations and will supply you with a certificate confirming this when the installation is complete. ***If you use this option please ensure that your installer is properly registered under the scheme before placing an order and that you obtain a certificate at the end of the installation.*** You can check this and find more details of the scheme on the Fensa website at www.fensa.co.uk / phone 0870 780 2028; **or www.ggf.org.uk ; OR**

Make a Building Regulations application – you can submit a Building Notice application see our web site for further information or request an application form from Building Control. You must then complete the form, and return it to us together with the appropriate charge ***at least*** two working days before removing the old window(s).

On receipt of the Building Notice, a Building Control Surveyor will normally visit your property twice - once before and once after the replacement windows are installed. When the works have been satisfactorily completed we will issue a Completion Certificate and you are advised to ensure the certificate has been issued before making the installers final payment (ensure you agree this first however at the signing of the contract stage).

What regulations do the windows have to comply with?

Where windows are to be installed in a listed building, or in a building in a conservation area, it may not be necessary to comply fully with all the requirements below - please contact us for advice and remember that ***you may also require Planning or Listed Building Consent for your proposed work.***

1) Thermal insulation:

Replacement windows must comply with minimum standards of thermal insulation - for window frames this is a maximum U-value of 2.0W/m^{2}K, whilst for doors a maximum U-value of 2.2W/m^{2}K is required. ***Please note that standard double glazed units do not meet these values - as a simple rule of thumb double glazing should be 16mm air gapped, argon filled and have a low emissivity coating. e.g 'K' glass.***
Please make sure when ordering your windows that your supplier can *prove* the glazing units will satisfy these requirements, as the Building Control Surveyor will need to see this proof before issuing a Completion Certificate. Please leave any labels in place on the glazing until the final inspection is carried to assist this matter.

Note - where windows are replaced you are required to provide suitable insulated half hour cavity barriers to the perimeter of the wall cavity around the window opening.

2) Structural safety :

If the replacement windows are wider than those they replace, or involve the replacement of bay windows, then the Building Control Surveyor will need to be satisfied that proper structural support is provided above the window and in bays that the support corner posts are adequate. In many older buildings, the timber frame of the window was often sufficiently strong to carry the load of a wall or roof above it without a lintel. Obviously in these cases either a lintel needs to be installed when the window is replaced, or the new frame carefully reinforced to carry the load.

3) Safety Glazing:

Low level glazing areas within 800mm of floor level, glazing in doors and within 300mm of door edges less than 1500mm above floor level should generally be of a type so that if broken, it will break safely. In practice this means such glazing should be either laminated or toughened. Ordinary glazing can still be used in small pane sizes however, provided the glass is sufficiently strong to resist breakage. **Refer to our Safety Glazing leaflet number 04.**

4) Means of escape:

All first floor windows in dwellings should ideally have opening lights large enough to allow you to escape through them if you were trapped in the room by a fire. This also applies to ground rooms where they do not open directly into a hall leading to an external door through which you could escape. To meet this requirement all such windows should have an unobstructed openable area of at least **0.33m^2 and be not less than 450mm high and 450mm wide** (the route through the window may be at an angle rather than straight through).

Locks (with or without removable keys) and stays may be fitted to egress windows, subject to the stay being fitted with a release catch, which may be child resistant.

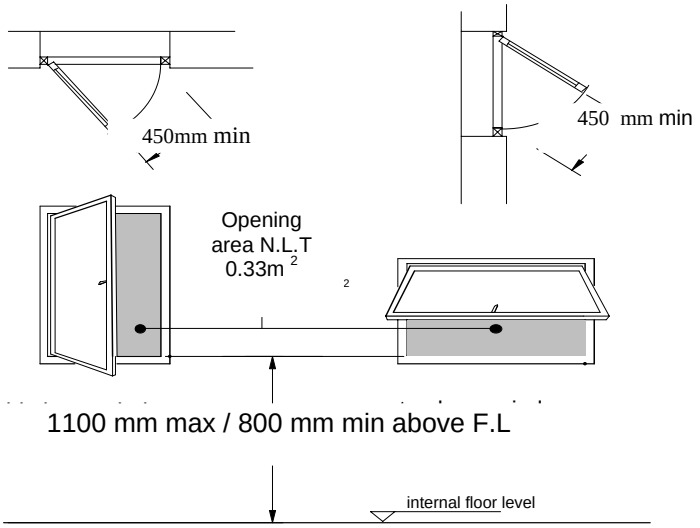

Some windows will not fully open to achieve these escape dimensions without installing proprietary escape hinges - make sure you specify them.

If your existing windows do not meet the above escape requirements, we would strongly recommend for your own safety, that you take the opportunity to provide them in the replacement windows. **This is not a however a requirement of the regulations,** which simply state that the replacement windows must be no worse than those they replace in this respect. Where the existing windows already have larger opening lights than the above requirements, those in the new windows can be reduced in size provided they are not reduced to less than the dimensions above.

Windows (particularly top opening casements and roof windows) should be designed to remain open without needing to be held by a person making their escape.

5) Ventilation:

The Building Regulations require that adequate ventilation be provided for people in buildings, so you must not worsen the existing rooms ventilation provisions. If your original windows have background trickle ventilation, then the replacements should also be fitted with them – though you are recommended to have minimum 8000mm^2 trickle ventilation fitted anyway.

In addition all habitable rooms and rooms containing a w.c. should have opening lights of at least 1/20th of the floor area of the room which they serve. Where no ventilation opening existed, minimum opening lights sizes must be provided as follows: Habitable rooms – 5000mm2 equivalent area; Kitchens / utility rooms /bathrooms (with or without w.c.) – 2500mm2 equivalent area.

For kitchens, utility rooms and bathrooms an extract fan is also normally required, so if you are removing window fans these must also be reinstated.

6) Combustion air to fires and heating appliances:

In some cases the existing windows may contain a permanent vent to supply combustion air to heating appliances, also you may find the removal of ill fitting windows which previously let air filter into the room could cause problems to your heating appliances. If this is the case you should ensure that either the replacement window contains a similar permanent vent, or that some other means of providing the required ventilation is installed at the same time.

It is advisable to have your appliances checked out by a registered installer e.g. corgi for gas appliances.

7) Retention of disabled thresholds:

Many newer properties are now provided with level access thresholds and your new doors must not worsen this access, nor reduce the doors clear opening width.

8) Protection from falling:

For opening windows less than 800mm above floor level where you can fall more than 600mm – the openable window should be fitted with a restrictor to prevent children falling out - over rideable in a fire situation - ask your installer for suitable guidance.